Electronic Design Automation (EDA)

EE 260
University of Hawaii

Outline

- Design Flow
  - Hardware description languages (HDL), e.g., verilog and VHDL
- Programmable Logic
  - PALs and PLAs
  - FPGAs

Simplified Design Flow

Design Problem

↓

Design Circuit

↓

Verify/Simulate Functionality (Debugging)

A description (or a model) of a circuit

Schematic

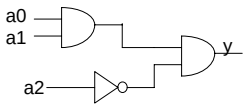

Hardware Description Language (HDL)
Verilog or VHDL

```
module Xcircuit(a0,a1,a2,y)
input a0, a1, a2;
output y;
wire w1, w2;

assign w1 = a0&a1;
assign w2 = ~a2;
assign y = w1&w2;
endmodule
```

This can be used to simulate design or to implement in hardware

We'll focus on these, but there's more!

Simplified Design Flow

Schematic

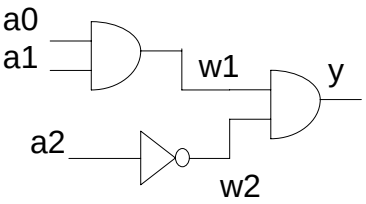

Hardware Description Language (HDL)
Verilog or VHDL

```
module Xcircuit (a0,a1,a2,y)
input a0, a1, a2;
output y;
wire w1, w2;

assign w1 = a0&a1;
assign w2 = ~a2;
assign y = w1&w2;
endmodule
```

Design Problem

↓

Design Circuit

↓

Verify/Simulate Functionality (Debugging)

↓

HDL model of a circuit (functional model, can be somewhat abstract)

Logicworks

Draw schematic

Simulate in Logicworks

HDL

Write HDL code

Simulate using tools such as Modelsim synopsis

Design Problem

↓

Design Circuit

↓

Verify/Simulate Functionality (Debugging)

↓

HDL model of a circuit (functional model, can be somewhat abstract)

HDL model of a circuit

↓

Synthesize model to get a gate level description

↓

Verify/Simulate Logic and Timing

↓

Implement in hardware Make sure design is consistent in hardware

Computer Aided Design (CAD)

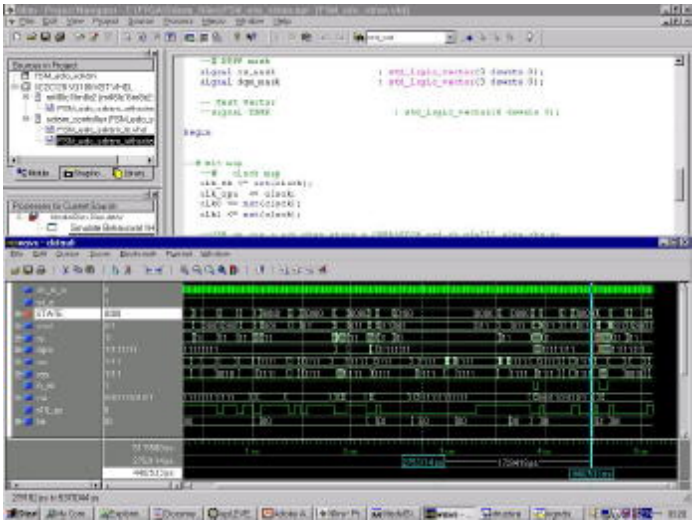

Hardware Technologies

- Programmable Logic Devices (PLDs)
  - Programmable Read Only Memory (PROM). Erasable PROMs (EPROMS)
  - Programmable Arrayed Logic (PALs) and Programmable Logic Arrays (PLAs)*
- Field Programmable Gate Arrays (FPGAs)*
- Application Specific ICs (ASICs)

Note that the next set of slides are (heavily) modified versions of slides found at

http://subjects.ee.unsw.edu.au/~elec1041

by Saeid Nooshabadi

The originals were adapted from

R. Katz's *Contemporary Logic Design*

Programmable Logic Arrays (PLAs)

- Programmable technology for combinatorial logic
  Sum of Products
- Array of ANDs followed by an array of Ors. Prefabricated
- Programmable by deleting connections at intersections

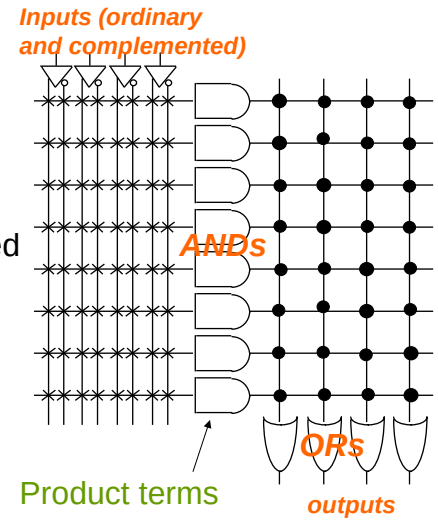

Programmable Array Logic (PALs)

- Each OR has its own set of ANDs (product terms)
- Easier to build, faster, and most cases it isn't much of a limitation

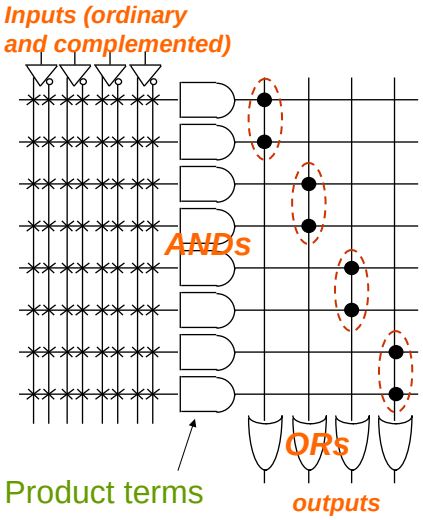

PLD (Programmable Logic Devices)

Registered PAL

Can implement a Mealy or Moore circuit

These things can be big: *Complex PLDs (CPLDs)*

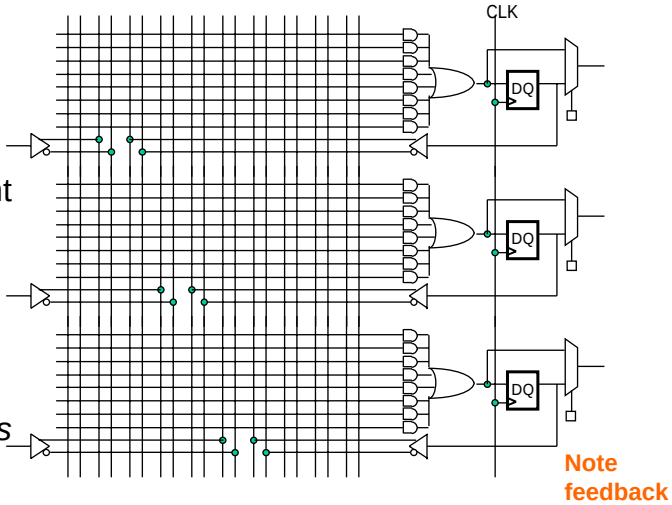

Field-Programmable Gate Arrays

- **Logic blocks**
  - To implement small combinational and sequential circuits
- **Interconnect**
  - Wires and switches to connect logic blocks to each other and to inputs/outputs
- **I/O blocks**
  - Special logic blocks at periphery of device for external connections

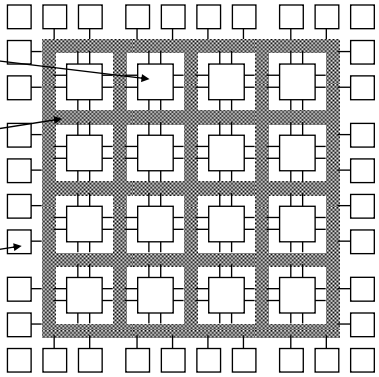

XILINX®

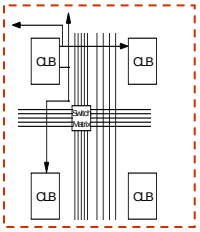

Programmable Interconnect

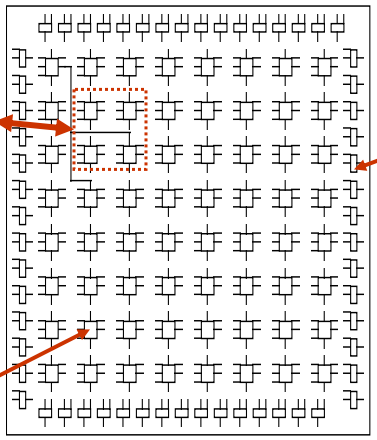

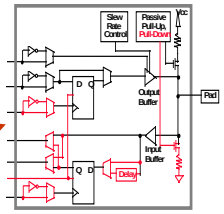

I/O Blocks (IOBs)

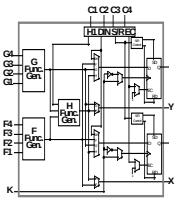

Configurable Logic Block (CLB)

- 5-input, 1 output function or two 4-input, 1 output functions
- optional register on output

Xilinx 4000 CLB

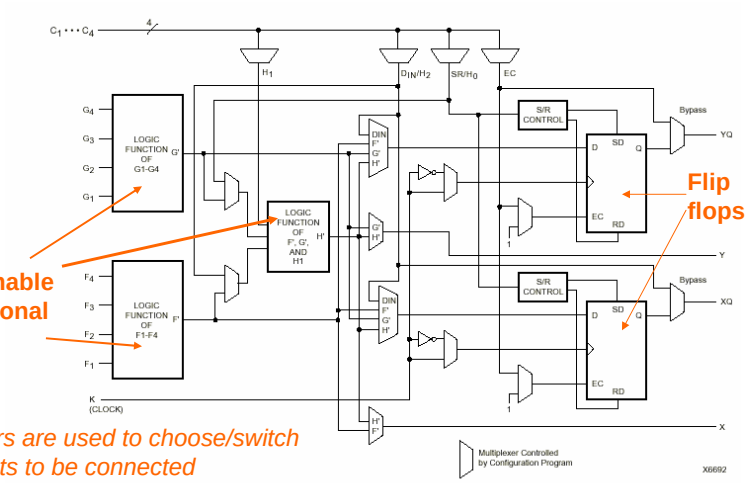

Programmable combinational circuits

Flip flops

Multiplexers are used to choose/switch components to be connected

Figure 1: Simplified Block Diagram of XC4000 Series CLB (RAM and Carry Logic functions not shown)

Can be configured to any small combinational or sequential circuit. In the case of comb circuits, the flip flops are bypassed

Xilinx 4000 Interconnect

We can connect CLBs and IOBs by using wires and PSMs

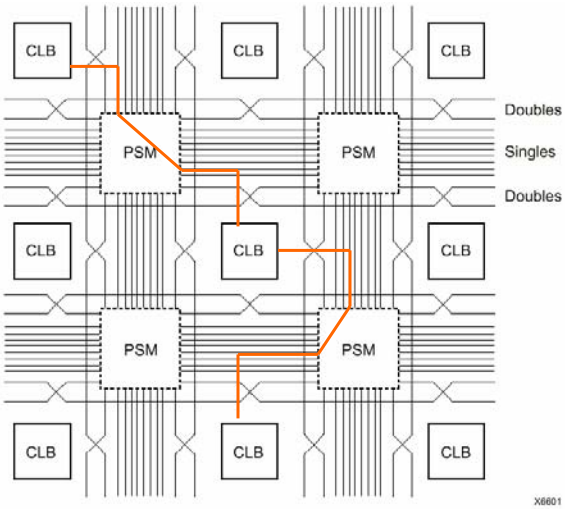

Figure 28: Single- and Double-Length Lines, with Programmable Switch Matrices (PSMs)

Xilinx 4000 IOB

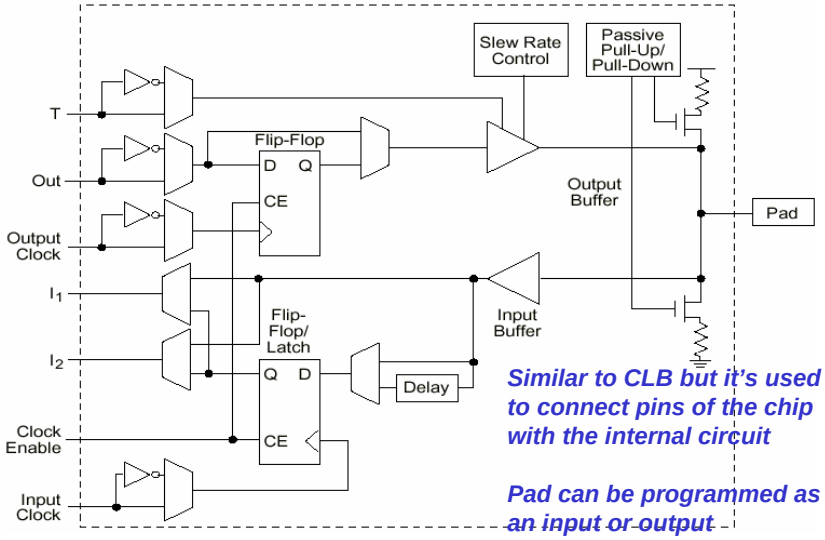

Similar to CLB but it's used to connect pins of the chip with the internal circuit

Pad can be programmed as an input or output

FPGA

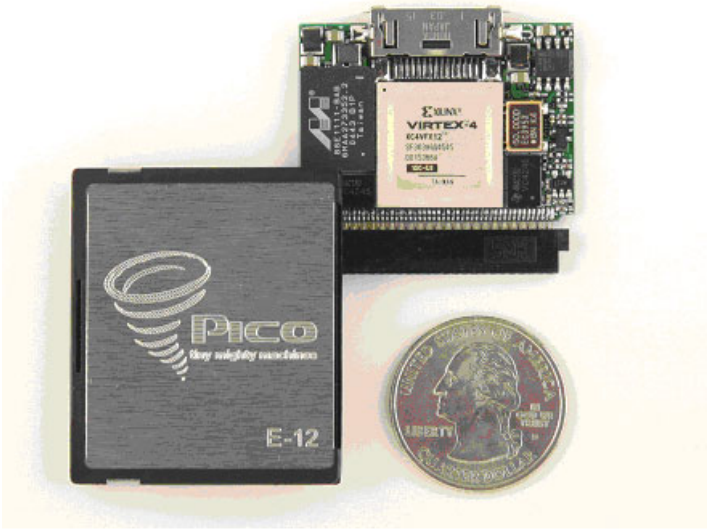

Final Comments

- ASICs
  - Usually cheaper (in bulk) and better performance
  - Goes to foundary and takes time. Better once final design is done -- no changes
- FPGAs
  - Better for very rapid design and redesign. Good for prototyping but also end design.
  - Better for small numbers of products
  - More expensive, and less in performance